6 Parts List / Ersatzteilliste / Pièces détachées / パーツリスト

Parts #	Description
160970	nano-TTR 1969 Ford Mustang RTR-X Unpainted Body Set
160973	SPEC-GRIP Tire 1:64th K-Compound (4PCS)
160975	nano-TTR Steering Parts and Drive Parts Set
160979	nano-TTR 1969 Ford Mustang RTR-X Painted Body Set
160981	nano-TTR 1969 Ford Mustang RTR-X - Car Only
160984	HPI Racing MTX-400 2.4GHz 4Ch Transmitter
160985	nano-TTR 3.85V 58mAh High Voltage LiPo 0.2233Wh
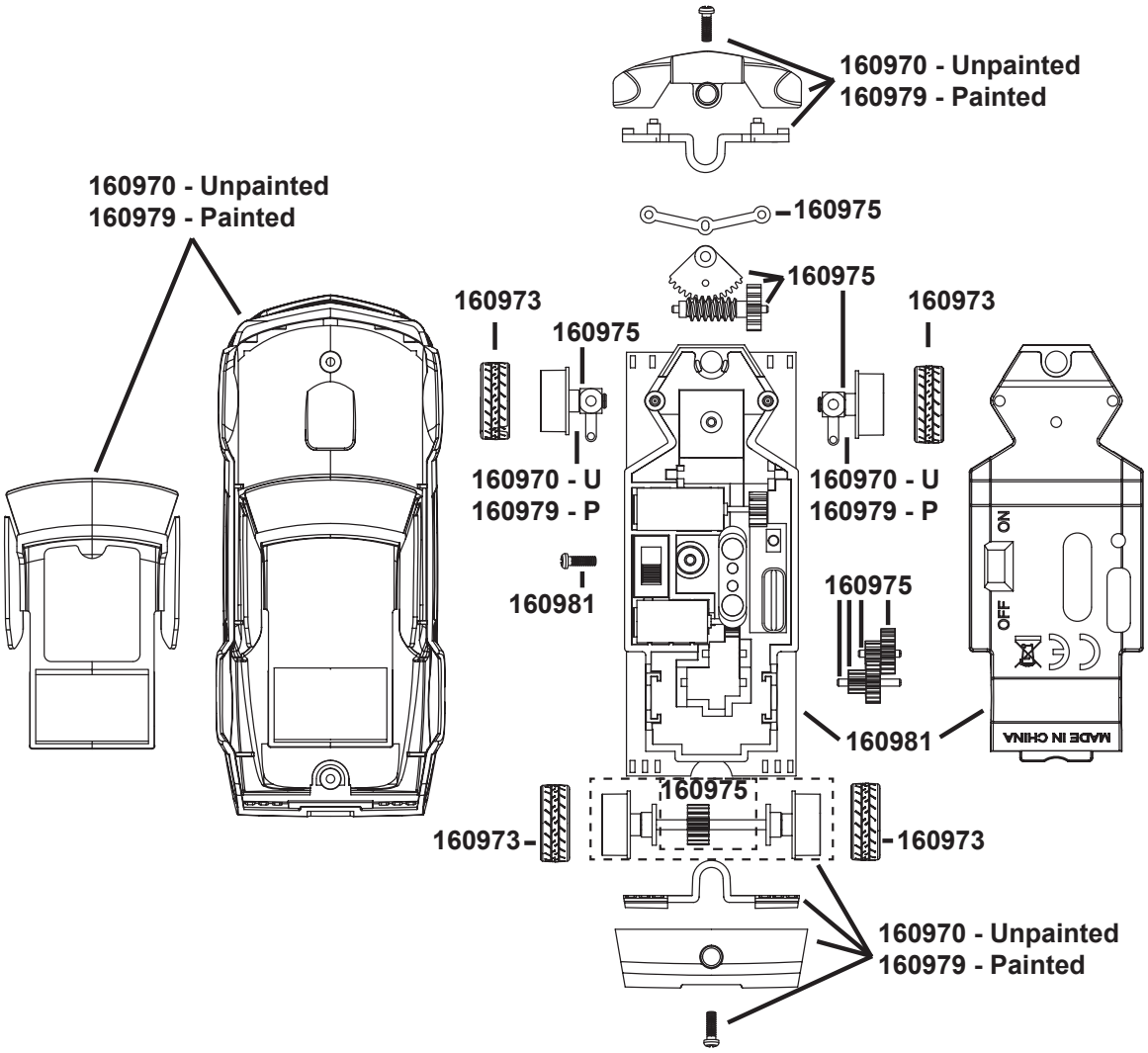
7 Exploded View / Explosionszeichnung / Vue éclatée / 展開図